Thadani and Go *Sustainable Energy Research* (2023) 10:11
https://doi.org/10.1186/s40807-023-00081-0

Sustainable Energy Research

ORIGINAL RESEARCH ARTICLE

Open Access

Large-scale solar system design, optimal sizing and techno-economic-environmental assessment

Hashwini Lalchand Thadani[1] and Yun Ii Go[1*]

Abstract

Malaysia targets to achieve an energy mix that is inclusive of at least 20% of renewable energies by the year 2025. Large-scale solar photovoltaic system (LSS-PV) emerged as the most preferable choice in Malaysia. Energy Commission (EC) Malaysia has launched competitive bidding on LSS since 2016 with a capacity of 500 MW in Peninsular Malaysia and targets to add the solar capacity in Peninsula Malaysia to 500 MW by 2021. Solar energy is a very intermittent source which causes voltage variation. This project aims to overcome the shortcomings of the intermittency of solar energy by identifying an optimum PV panel sizing and configuration that reduces the intermittency of the supply. The project was carried out in three distinctive stages; first suitable sites were selected based on the EC proposed locations and further scrutinized to locations near the Main Transmission intake. The second stage was to size of PV panels and the inverters. The optimization was carried out at the PV module level. Suitable inverters for the said configuration was identified with a tool that evaluates the technical aspects of renewable energy power systems. The final stage was the economic analysis and environmental assessment. The optimization method has shown improvement in the system production from a range of 1.7–3.9% in the 30 MW plants. Countries with similar climates as Malaysia like Indonesia, Philippines and Thailand can adopt this optimizing method to size PV farms.

Introduction

The world is embarking on the potentials of renewable energy as a dominant supply in the energy industry. Solar energy is the sun's energy that has been harnessed by humans. Large-scale solar photovoltaic (LSS-PV) system is the arrangement of hundreds of thousands or millions of photovoltaic (PV) panels arranged to generate energy which can generate energy up to 1 MW at least. Southeast Asian countries have shown an increase in the need for energy due to the exponential increase of industrial activities, growing population and rising incomes. With the constant reliance on fossil fuels the greenhouse gas (GHG) emission rates have been increasing and the need to switch to renewable energy has become the main goal of the governments involved.

There are 10 major operational solar plants in Southeast Asia located in countries like Philippines, Thailand, Cambodia and Malaysia. Philippines houses the biggest operational Solar Plant, the Cadiz Solar Power Plant, which has a capacity of 132.5 MW. The Philippines has had a large growth in PV installations since the year 2014, with more than 881 MW of recently added capacity. Philippines has a grand capacity of 903 MW currently installed and aims to achieve 3 GW of installed capacity (Dorothal, xxxx). Thailand has also been actively venturing into solar farms and currently has 11 operational solar PV projects. The combined capacity of the 11 plants equates to 729.4 MW. Thailand aims to achieve a 6 GW installed capacity by the year 2036 which will ensure the renewable energy makes one-third of the energy mix in the country (Dorothal,

*Correspondence:
Yun Ii Go
y.go@hw.ac.uk
[1] School of Engineering and Physical Sciences, Heriot-Watt University Malaysia, 1, Jalan Venna P5/2, Precinct 5, 62200 Putrajaya, Malaysia

xxxx). According to IEEFA (IEEFA, 2019), the cumulative solar PV capacity of Southeast Asia could reach 35.8 GW by the year 2024 as compared to the year 2019, indicating an increase of almost three times.

Malaysian government planned to increase the percentage of renewable energy into the energy mix to one-fifth of it. The LSS tender in Malaysia that was introduced by the Energy Commission (EC) Malaysia was started in 2016 and has been the most promising one by far (Christopher Lee & Ramlel, 2019). Currently Malaysia has one active Solar Farm which is the 19 MW Kuala Lumpur Airport Solar Plants. 563 MW of capacity has been auctioned and is expected to start operation in 2019 and 2020 (Dorothal, xxxx). Malaysia is situated at the equator and has a daily average radiance of 4500 kWh m^{-2} and has average sun hours of 12 h per day (Aziz et al., 2016). The average annual solar irradiance of Malaysia is 1643 kWh m^{-2}. It has been identified that Kota Kinabalu, Sabah has the highest irradiance of 1900 kWh m^{-2} (Aziz et al., 2016). For the time being Malaysia uses the solar energy for water pumping, water heating and to dry agriculture. With the governments initiative to ensure that LSS is incorporated into the renewable energy plan, the reliance on solar will increase promising to reduce net carbon emission as per agreed in the Paris Agreement. Perak and Kedah have the highest potential for solar energy with 20% and 19% capacity, respectively. Based on this observation it can be concluded that these states have the land availability and sufficient solar irradiance to cater for LSS-PV. Table 1 shows the summary of LSS-PV capacities across Southeast Asian Countries and Malaysia. Table 2 shows the potential solar capacities for each state in Malaysia.

A PV system design generally has limitations that need to be tackled. The factors that need to be considered when sizing and scaling a PV system is dependent on the available space and budget. Space is the most prominent factor that needs to be addressed, and there are two categories of area sizing: roof's space area limitation and land space area constriction. In this context the land space area is what matters. To achieve optimum configuration of PV modules in given installation area, several factors need to be studied. The tilt angle, maximum land space area and shading factor have been taken into consideration by past researchers (Alsadi & Khatib, 2018). Budget constraints should also be considered when sizing a PV system. An economic analysis on the cost benefit of the system to ensure the investment into it will not be a loss. With the community being more aware of the need of green technology, initiatives by the government like introducing Net Energy Metering (NEM) and Feed-in Tariff (FiT) have become very beneficial for the renewable energy sector. Hence, the novelty of this project is to focus on the optimization of the system at the PV modules level. This project thrives to identify the suitable optimizer that can be fit with the selected PV modules to improve the system production. Optimizers assist to increase generation and to reduce hotspots and shading of the panels. The use of optimizers can tackle the matter of land shortage as lesser panels can be used to achieve the targeted generation.

The energy demand is a very crucial parameter that needs to be considered when sizing a solar PV farm. Understanding the countries need and the current generation profile will ensure the energy produced is not wasted and is put to good use. Based on the MS-1837, the PV modules can either be crystalline silicon PV modules which need to comply to MS IEC 61215 or be thin PV modules which need to comply to MS IEC 61646. The PV class should be Class II. As for reverse current, the PV modules must be able to conduct a reverse current of $2.6 \times I_{SCMOD}$ continuously without damage. The inverter must comply to either of these standards set MS IEC 61000-3-2, MS IEC 61000-6-3, MS IEC 61000-6-4, MS IEC 60364-7-712 and MS 1992 or IEEE 1547 and IEEE

Table 1 Summary of operational PV plants in SEA

Countries	Operational PV plants in Southeast Asia (MW) (Dorothal xxxx)
Malaysia	19
Thailand	729.4
Philippines	625.3
Cambodia	10

Table 2 Solar capacity potentials in Malaysia

States in Malaysia	Solar capacities (MW)
Selangor	87.942
Terengganu	56.99
Kedah	194.89
Kelantan	39.99
Perak	198.87
Penang	21
Perlis	33.996
Johor	68.99
Melaka	6.8
Negeri Sembilan	121
Pahang	109.916
Sabah	61.5
Labuan	11

1547.1. In the event of a main supply failure the inverter needs to be kept separately.

Literature review

According to Notton et al., (2010), the optimal sizing ratio was studied based on the PV technology, type of inverter and the location of the plant. The curve of efficiency for the chosen inverter severely influences the relative size of the DC-AC converter and to the PV array. The PV module tilt angle has a great influence on the PV system performance, provided the inverter is undersized as compared to its influence on the PV system optimal ratio. The mean value on a monthly basis of the PV module and the PV efficiency is also affected by the PV inclination. It was proven that the optimal ratio of size for a 45° inclined surface is lower compared to that of a perpendicular and flat surface. Based on the site location, when the area of the site is large and there is a variance in the solar radiation and ambient temperature, it shows some difference in the optimal sizing ratio. Clearly based on the study led by Notton et al., (2010), the PV technology has not much of effect on the optimal sizing ratio and the efficiency of the inverter.

Based on the study conducted by Sulaiman et al., (2012), evolutionary programming (EP) was utilized to make a selection on the optimal number of PV cells and inverter for the system, which is a technique that sizes the GCPV intelligently. The conventional GCPV system sizing model is presented in this paper based on the Malaysian Standard, MS 1837: 2010 (FIRST REVISION), D.O.S. MALAYSIA & Editor., 2010). The study was done based on GCPV systems without energy storage as it is predicted that such method of installation will be popular in the near future. The PV technology that was taken into consideration is the common silicon-based, monocrystalline and polycrystalline PV modules, which is the boundary of the research. The Meta-EP sizing method was identified to be superior compared to the other EP methods studied in this research. The Meta-EP method has been compared to two other optimal sizing methods, namely, Artificial immune system (AIS) and Genetic Algorithm (GA). The sizing results of the optimization methods have proven that the Meta-EP gives an average system yield of 1142. 19 kWh/kWp which is higher than that of the AIS and the GA methods. When looked at in terms of Net present value (NPV), the Meta-EP optimization technique has proven to give a better NPV of RM −11181.99.

Ramli et al. (2015) studied how to identify an optimal photovoltaics (PV) array and inverter size for a grid-connected PV system in Saudi Arabia. It is understood that the PV array size relies on the solar radiation available in the region. The PV size is adjusted to accommodate the yearly load demand. There is a need for an inverter to convert the DC to AC. The inverter size relies on the maximum DC input power and the maximum defined output power. Based on the simulation conducted by HOMER, it can be seen that the electricity produced by the PV array is dependent on its size, and there is an almost linearly increasing relationship. The study also proves that a bigger PV size has a lower CO_2 emission rate in million kg/year. The inverter size needs to be maintained at an optimum point as an increase in its capacity will lead to an increase in the Net Present Cost (NPC) after 1500 MW. When the inverter of 1500 MW is combined with a PV Array of 2200 MW, there is an excess electricity percentage of 1.65% which will be wasted. From an economical point of view, when the ratio of PV array to inverter (R) is 1.47 (size of PV array: 2200 MW; size of inverter: 1500 MW), the total NPC in $ million is much lower compared to that of when the $R = 1.00$ (PV array and inverter same size).

Zebarjadi et al. (2016) studied the heuristic approach to be used as an optimization tool for a grid-connected PV (GCPV) power plant. The study was conducted based on the variety of electricity prices available in Mahan, Kerman, Iran. The harmony search algorithm was used as a basis for optimizing the sizing of the GCPV power plant. It is observed that using PV systems once the electricity prices 3.8 times, which proves that it is more worth it to utilize the PV system for electricity generation. When the price of electricity surges up to 10 times more, using a storage system instead of buying the deficit electricity from the grid is a more cost-effective option. Luo et al. (2018) studied the use of PV-STATCOM in the optimal sizing and siting of distributed generation systems in PV solar farms. To ensure no discrepancy in the data used to obtain the results, the modelling of uncertain solar irradiance, the modelling of the PV's output and the modelling of the loads were conducted. The model was proposed to minimize the cost associated with the distributed generation (DG) that is yet to be planned. The possible constraints that might be faced have also been studied, namely, PV's power factor constraint and the constraints on normal operation. Luo et al. (2018) concluded that the proposed model can take into consideration the reactive power quick response characteristics of PV during DG's optimal sizing and siting.

Kerekes et al. have presented two papers (Kerekes et al., 2011, 2012) on the optimal sizing of utility-scale solar power plants. The researchers have studied the important factors that influence the optimization of an LSS-PV, which are the solar irradiance, the PV cells, the combination of inverters/converters to be used and the possible presence of shading. In Kerekes et al., (2011), an optimization algorithm was proposed, which calculated the

number of modules to be arranged in series and parallel. The proposed algorithm results were compared with the simulation done by PVSYST, and the results show that the annual electricity productions (MWh) were 119.9 and 115, respectively, showing a deviation of 4.26%. In Kerekes et al., (2012), the GA functions available in the Global Optimization Toolbox was simulated with MATLAB and the results of the annual electricity production (MWh) were compared to the simulation done by PVSYST. The proposed design and PVSYST had yield an annual electricity production of 38.983 MWh and 37.619 MWh, respectively. Rosselan et al. (2017) used the Dolphin Echolocation Algorithm (DEA) optimization. This algorithm uses the concept of the behaviour of the flying bats to determine the location of the prey and obstacle by listening to the echoes reflected from high-frequency clicks that they emit. DEA was used to optimally size the PV modules and the inverters to yield maximum performance ratio (PR).

Kornelakis & Koutroulis (2009) have studied the methodology of optimizing the design of a grid-connected photovoltaics system (GCPV). The first step in modelling a GCPV system is to identify the number of PV cells to be mounted based on the installation area, the tilt angle, dimension limitation and to carter the feasible allocation of PV cells among the inverters. The next step is to optimize the sizing procedure with a GA-based optimization procedure. The data used in the optimization step is the solar irradiance and the ambient temperature throughout the year. The device-type combinations were optimally sized and the combination that resulted in the highest net profit was concluded to be the optimal GCPV structure. Kornelakis & Marinakis (2010) have studied the use of Particle Swan Optimization (PSO) in optimally sizing the GCPV system. The significant step in this paper that is different from Kornelakis and Koutroulis (2009) is the use of PSO. This algorithm is a stochastic optimization technique based on the evolution of population of solutions. The advantage of this method is there is no need for calculation of derivatives. When the GA and PSO optimization are compared, it can be clearly seen that the number of iterations for the PSO algorithm is lesser compared to GA's.

The survey conducted by Rakhshani et al. (2019) on the integration of LSS-PV in the power system, the most vital characteristics of a PV system are the PV generators and the inverters that are connected in parallel to the power grid. This will lead to an even distribution of the load when the power grid is accessible. PV-based inverters do not have the ability to provide any type of reactive/voltage support. Geographical factors, setting of PV and aspects related to the environment are vital characteristics to be taken into account for PV systems. In Alsadi & Khatib's work (2018), the optimization of PV power systems relying on the criteria, limitations, models, techniques and software tools. The crucial parts of modelling a PV system are modelling of PV panels and the modelling of battery systems. The available software to model a PV system are divided into simulation tools (INSEL), economic evaluation tools (CalSol, HOMER etc.), analysis and planning tools (PVSYST, PV*SOL, SolarDesignTool etc.) and solar radiation maps (iHOGA, PVGIS and SolarGis). Optimization techniques for GCPV presented in this paper are numerical methods, Genetic Algorithm (GA), Particle Swarm Optimization (PSO) and Evolutionary Programming (EP). The constraints that are considered when planning a PV system are the space, energy demand and the budget of the project.

Tobar et al. (2016) reviewed the grid needs for the integration of LSS-PV plants in the transmission system. It was concluded that power plants that use conventional energy must provide reactive support to the grid and reduce voltage deviations. Commonly, voltage function in a one-tenth band of the rated voltage. The reactive power support feature of the inverter and the ancillary devices such as STATCOMs or capacitor banks are the reasons of this obligation. When connecting the LSS-PV to the grid voltage regulation, two problems have occurred: the voltage has to be kept within a dead band regulated by TSO and the LSS-PV has to fulfil the capability curve specified by the TSO for the relation between reactive and active power. There is no definite guarantee of voltage stability studies need to be conducted to conceive different solutions and control algorithms. Wong et al. (2014) reviewed the voltage issues when connecting the PV system to the grid in Malaysia. The abuse of voltage upsurge is very deceptive in the low voltage distribution networks in Malaysia. There probability of voltage violation is approximately 47% per day in Malaysia. Voltage fluctuation is very common in high voltage (HV) and medium voltage (MV) networks. The HV and MV are connected to the because arc furnace, welding machines, rolling mills and mine winders causing the fluctuation in voltage. According to Malaysia's grid code, the acceptable tolerance of the voltage unbalance factor is 2%.

The economical part of a GCPV have been studied by several researches (Liu et al., 2012; Mondol et al., 2009; Türkay & Telli, 2011), when a GCPV system is installed the cost of each component has to considered, including the replacement of inverter as the inverter generally has a shorter lifespan compared to that of PV modules. The IRR is studied and evaluated; it has been concluded that in Queensland (Liu et al., 2012) the installation of PV has a return of 12–16.3% per year. Based on Mondol et al., (2009), the cost of PV electricity varies significantly based on the PV surface slope. In Europe the lowest cost of PV

electricity was identified at approximately 30–40°. Türkay et al. (Türkay & Telli, 2011) highlighted that the high initial investment cost and the intermittentcy of renewable energy are the reasons that restricted the development of these technologies. The advantages of switching to renewable energy are the low cost of maintenance, quick payback time and demand dependent. The payback time of a PV hybrid system is approximately six to seven years. The summary of all the papers (Alsadi & Khatib, 2018; Cabrera-Tobar et al., 2016; Failed, 2017; Kerekes et al., 2011, 2012; Kornelakis & Koutroulis, 2009; Kornelakis & Marinakis, 2010; Liu et al., 2012; Luo et al., 2018; Mondol et al., 2009; Notton et al., 2010; Rakhshani et al., 2019; Ramli et al., 2015; Rosselan et al., 2017; Sulaiman et al., 2012; Türkay & Telli, 2011; Wong et al., 2014; Zebarjadi & Askarzadeh, 2016) mentioned in this section is provided in Table 3.

Based on previous researchers, the solar PV systems have been designed in the conventional sizing procedures. Several algorithms have been introduced to further improve the design stages in an LSS-PV. The prominent design parameter that is always optimized or improved is the PV modules and the inverter sizing. The intermittency of solar energy has been a prevailing problem in the road to greener energy. The intermittency of the resource has led to a fluctuation of voltage, therefore leading solar energy to be an unreliable constant source of electricity. The optimization of the configuration of LSS-PV will pave a path in reducing the intermittency of the resource, ensuring the PV modules are efficient and can capture as much energy during the day to provide it to the gird. The novelty of this project is to focus on the optimization of the system at the PV modules level. This project thrives to identify the suitable optimizer that can be fit with the selected PV modules to improve the system production.

Methodology

This project focuses on the sizing and optimization of PV modules and inverters. This study was conducted by simulating four potential PV farms with an energy optimizing tool. The LSS-PV was assessed based on its energy yield, losses and performance ratio. The research was conducted in three stages, first one was to identify suitable locations with reference to Energy Commission (EC) Malaysia. The next stage was to design the LSS-PV based on Malaysia's guidelines and to identify the suitable configurations of PV modules and inverters that can generate the optimum amount of energy to the grid. The final step was to carry out an economic analysis on the PV system and an environmental assessment on the proposed LSS-PV. Fig. 1 shows the overview of the general workflow of the study. Figure 1 clearly shows the stages involved in this project.

Resource assessment

a. Location of site

Malaysia is a country with sunlight throughout the year. The site is selected based on the irradiance of the location. A steady solar irradiance will promise a steady flow of energy throughout the year. The Energy Commission of Malaysia has identified locations with good irradiance and low shading factor. The LSS project in Malaysia has an aggregated capacity of 500 MW. The ongoing LSS project in Malaysia is the LSS3 project. Bidders have been finalized and the export capacity have been determined. The sites were further scrutinized to be located near the Transmission Main intakes of each site based on the Distribution Map by Tenaga Nasional Berhad (TNB).

b. Load profile and solar irradiance

Malaysia is a developing Southeast Asian country that has a steady growth in its Gross Domestic Product (GDP), which leads to a surge of energy consumption. Statistics (Malaysia Electricity Consumption, 2020) have shown that in the last 10 years there has been a steady increase of electricity in Malaysia, indicating the need for greener options to be a part of Malaysia's energy mix. Malaysia has already installed two LSS with installed capacity of 958 MW. The Energy Commission of Malaysia has already initiated the third cycle of LSS in Malaysia. The current issue faced by the government on the installation of LSS is that there is an intermittency and storage options are being studied to overcome this (Shaping the Future of Malaysia's Energy Sector & E.C., 2018).

Malaysia's monthly electricity consumption is varied depending on the consumers usage. As observed in 2019 the electricity consumption in May is the highest which is 13,004.3 kWh and the least usage is in March with a consumption of 11,794.5 kWh (Malaysia Electricity Consumption, 2020). The average annual electricity consumption in Malaysia is 4342 kWh (Energy consumption in Malaysia, 2020). The climate conditions in Malaysia are light winds, uniform temperature, high humidity, and copious rainfall. Malaysia has unvarying temperature throughout the year as it is situated at the equator (Petinrin, 2015). Solar irradiance maps play a role in helping users gauge the solar resources that are available. The solar irradiation average in Malaysia daily is about 4.7–5.8 kWh/m^2 and can achieve a solar radiation of 6.8 kWh/m^2 in August and November. The annual average in Malaysia is 1596.5–1643 kWh/m^2/year and the monthly irradiance is 133 kWh/m^2.

Table 3 Summary of literature review (Alsadi & Khatib, 2018; Cabrera-Tobar et al., 2016; Failed, 2017; Kerekes et al., 2011, 2012; Kornelakis & Koutroulis, 2009; Kornelakis & Marinakis, 2010; Liu et al., 2012; Luo et al., 2018; Mondol et al., 2009; Notton et al., 2010; Rakhshani et al., 2019; Ramli et al., 2015; Rosselan et al., 2017; Sulaiman et al., 2012; Türkay & Telli, 2011; Wong et al., 2014; Zebarjadi & Askarzadeh, 2016)

No.	Authors	Title of paper	Year	Key findings	Design parameter	Performance parameter
1	G. Notton et al.	Optimal sizing of a grid-connected PV system for various PV module technologies and inclinations, inverter efficiency characteristics and locations	2010	• The relative size of the inverter is affected by the efficiency of the selected inverter • Inclination has a less influence on the optimal ratio of the PV system but a high influence on the PV system performance	Size of PV panels and size of inverter	Total system output
2	Sulaiman et al.	An intelligent method for sizing optimization in grid-connected photovoltaic system	2012	• The fitness value of each generation was improved, and the maximum yield of system was achieved when the NLSS was incorporated to Meta-EP • The maximum NPV was achieved as well	PV module and inverter model	System yield
3	Ramli et al.	Optimal sizing of grid-connected PV energy system in Saudi Arabia	2015	• A larger PV size connected to the grid proves lower emission of CO_2 • The inverter size influences the CO_2 emissions as well, the bigger the inverter the lower the emission	PV arrays and inverter size	Net present cost, renewable electricity fraction, excess electricity and CO_2 emissions
4	M. Zebarjadi et al.	Optimization of a reliable grid-connected PV-based power plant with/without energy storage system by a heuristic approach	2016	• The sizing of the GCPV was optimized with the harmony search algorithm with respect to the electricity prices	Area of installed PV system	Electricity price
6	Liu G et al.	Techno-economic simulation and optimization of residential grid-connected PV system for the Queensland climate	2012	• The NPC and the CO_2 emission are the criteria used to measure the effectiveness of the optimized system applied in 11 cities around Queensland • The tilt angle was varied from 0° to 45°, to be applied in all 11 cities. Based on the best slope degree the COE, ROI and CO_2 emission are analysed	PV system design (PV slope and size)	Investment cost, financial income, electricity generation and CO_2 emission
7	Türkay et al.	Economic analysis of standalone and grid-connected hybrid energy systems	2011	• Analysing the use of renewable energy in power generation and defining the restrictions of its measure values and rivalry state • Variation of possible system configuration arrangements was simulated where the cost and CO_2 emission were analysed	Cost of RE components	Price of electricity
8	Kerekes et al.	An optimization method for designing large PV plants	2013	• The algorithm developed was tested with several optimized parameters. (optimized for minimum LCOE, non-optimized, optimized only for minimum cost and optimized only for maximum energy.) • The performance of each scenario was evaluated based on the LCOE, Tilt angle, DIM	Number, type and arrangement of components	Annual electricity production

Table 3 (continued)

No.	Authors	Title of paper	Year	Key findings	Design parameter	Performance parameter
9	Khatib T et al.	On the effectiveness of optimally sizing an inverter in a grid-connected photovoltaic power system	2017	• The optimally sized inverter was determined with the model of PV grid-connected systems developed using MATLAB • A sizing ratio of 1.66 gives an efficiency of 95.16%	Sizing ratio	A conversion efficiency yield factor and capacity factor
10	Kerekes et al.	A practical optimization method for designing large PV PLANTS	2011	• An algorithm was developed using MATLAB and PVSyst was used a benchmark to evaluate most significant models of the PV system, that optimizes the assembly of the plant based on pre-defined goals, such as the minimum Levelized Cost of Energy	Voltage of PV modules	Current of PV modules
11	Luo L et al.	Optimal siting and sizing of distributed generation in distribution systems with PV solar farm utilized as STATCOM (PV-STATCOM)	2018	• The reactive power fast response characteristic of the PV was taken into account during DGs' optimal siting and sizing • Making use of PV solar plants as fast reactive power source has very high economic benefit under emergency, this factor has to be taken into consideration for DG's optimal sizing and siting	Number of buses in distribution system	Voltage magnitude PV capacity
12	A.Kornelakis et al.	Contribution for optimal sizing of grid-connected PV systems using PSO	2010	• The results for the PVGCS optimal sizing are evaluated based on the tilt angle, the shading distance, number of panels arranged in series and parallel • The results for the PVGCS optimal economic are evaluated based on the NPV, IRR and the cost	Tilt angle, arrangement of PV array	Power output
13	A.Kornelakis et al.	Methodology for the design optimization and the economic analysis of grid-connected photovoltaic systems	2009	• The PVGCS optimization was arranged in 4 combinations based on the PV module type and the DC/AC Converter type. Combination #2 has proven to be an overall optimal solution as the installation area is utilized and the target PVGCS is 86.2% • The PVGCS optimal economic results were evaluated based on the 4 combinations as well. Combination #2 was proven to be the overall optimal solution	Tilt angle, arrangement of PV array	Total PV generated energy, NPV

Table 3 (continued)

No.	Authors	Title of paper	Year	Key findings	Design parameter	Performance parameter
14	Rakshani et al.	Integration of large-scale PV-based generation into power systems: a survey	2019	• Important characteristics that have to be considered in PV system are the topographical factors, location of PV and aspects related to the environment • Loads will be distributed appropriately when the utility grid is accessible; therefore, the PV-based generators together with inverters should be connected in a series–parallel configuration to the grid • Energy storage needs to be taken into account when dispatching ancillary services of PV systems	–	–
15	Alsadi et al.	Photovoltaic power systems optimization research status: a review of criteria, constrains, models, techniques and software tools	2018	• To predict the energy output of the system, the meteorological condition at the system's location needs to be investigated • PV system optimizing criteria are the power reliability and the system cost analysis. These criteria need to have an ideal combination to ensure any PV system is optimized • Techniques to optimize grid-connected PV system are by numerical methods, genetic algorithm, Particle Swarm Optimization and evolutionary programming	–	–
16	Mondol et al.	Optimizing the economic viability of grid-connected photovoltaic system	2009	• When the input power into the inverter is above the designated capacity the efficiency of it reduces • The input power into the inverter has a large impact on its efficiency • The sizing ratio has an influence on the PV saving in 5 location in Europe	PV/Inverter sizing ratio, PV slope, PV unit cost	PV electricity cost
17	Rosselan et al.	Sizing optimization of large-scale grid-connected photovoltaic system using dolphin echolocation algorithm	2017	• The selection of optimal PV cells and inverters were achieved with the use of DEA, the results showed an increase in the performance ratio • Incorporating DEA is justified as the results has shown that DEA produces alike optimal result to ISA but with shorter computational time	Sizing of PV modules and inverter	System yield

Table 3 (continued)

No.	Authors	Title of paper	Year	Key findings	Design parameter	Performance parameter
18	Wong et al.	Grid-connected photovoltaic system in Malaysia: a review on voltage issues	2013	• The likelihood of having voltage abuse per day is about 47% typically. It is clearly demonstrated that the violation of voltage rise is very deceptive in the low voltage distribution networks in Malaysia • Malaysia's tolerable voltage unbalance factor is two per cent • High voltage (HV) and medium voltage (MV) networks normally have the occurrence of voltage fluctuation and flicker	–	–
19	Tobar et al.	Review of advanced grid requirements for the integration of large-scale photovoltaic power plants in the transmission system	2016	• Voltage deviation is a common issue to be solved by conventional power plants must to ensure reactive support can be provided to the grid. Commonly, the voltage works in a band of 10% of the rated voltage. The accolade of this requirement depends on the reactive power support characteristics of the PV inverter and ancillary devices such as STATCOMs or capacitor banks • To connect LS-PV to the grid, the voltage control has two main encounters: (i) the voltage has to be kept within a dead band regulated by TSO and (ii) the LS-PV has to accomplish the capability curve given by the TSO for the relation between reactive and active power	–	–
20	Hashwini et al.	Optimization of LSS-PV system in Malaysia	2020	• Optimization of design steps in LSS-PV • Inverter selection with low mismatch loss • Economic viability of LSS-PV development	PV/inverter sizing ratio	System yield, LCOE

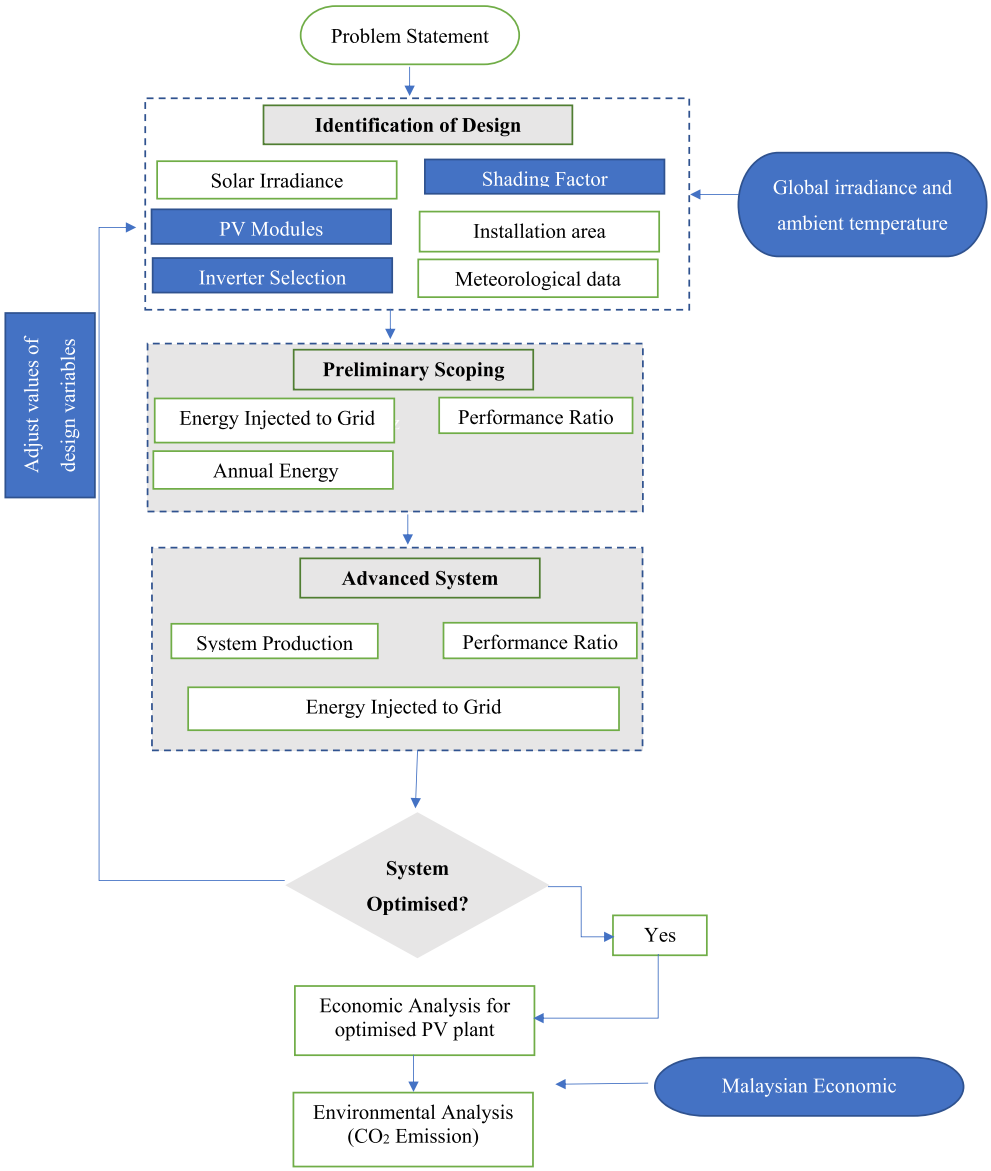

Fig. 1 Flowchart of project methodology

c. Tilt angle identification

Khatib et al. (2015) have studied the optimal tilt angle that is applicable in Malaysia. The study was conducted based on Liu's and Jordan's model of solar energy incident on a tilt surface. The study has proven that the optimal angle of Malaysia varies seasonally. Therefore, to fit the all year-round requirement, an average value for the tilt angle was identified for each zone. The zones were categorized based on the states in Malaysia. The average values of tilt angle vary from 4° to 5°.

Sizing modelling of PV panels and inverters

In sizing a utility-scale PV module, a very crucial procedure is the technical sizing which takes precedence over the economical sizing. Based on the energy modelling tool the conventional sizing approach was implemented to size the PV modules for the PV farm. The sizing assumption was based on the Malaysian climate and the tilt angle assigned was 5°. The aim of sizing the panels was to ensure maximum output of the system. The technical sizing steps (FIRST REVISION), D.O.S. MALAYSIA & Editor., 2010; Sulaiman et al., 2012;;

Edmund et al., 2022; Rates, 2020; Hamzah et al., 2023; Failed, 2017; Thadani et al., 2021; Standard and for Photovoltaic (PV) arrays. xxxx; PVSyst xxxx) are explained in detail below.

Step 1: A PV module and an inverter should be chosen at this point to ease the sizing process. The ratings of these components need to be identified. The crucial specifications given by the manufacturers that are needed from the PV modules are to be at Standard Test Conditions (STCs). The maximum power, $P_{\max\_STC}$, the maximum voltage at maximum power, V_{MP_STC}, and I_{MP_STC} are needed. The open-circuit voltage,V_{OC}, and the short-circuit current, I_{SC}, the temperature coefficient for short-circuit current,$\mu_{I_{SC}}$, the temperature coefficient for maximum power, $\mu_{P_{max}}$, the temperature coefficient for open-circuit voltage, $\mu_{V_{OC}}$, the temperature coefficient at maximum power voltage, $\mu_{VMP,}$ and the maximum allowable system voltage of PV arrays are needed. In terms of dimensions the PV panels length and width are specified by the manufacturer, L_{PV} and $W_{PV.}$ STC is a wide industry standard of PV modules at cell temperature of 25 °C, irradiance of 1000W/m^2 and air mass of 1.5.

For the inverter, the specifications set by the manufacturer are the nominal PV power, $P_{nom_{inverter}}$, the maximum input voltage of inverter, $V_{Max_{inverter}}$, the maximum and minimum MPP voltage, $V_{MPP,inveter}$ and $V_{MPP,main}$, and the nominal MPP voltage, $V_{MPP,nom.}$

Step 2: The input voltage limit to the MPPT of the inverter was revised. This is necessary to ensure the output voltage to the PV array does not exceed the allowable range of input voltage into the inverter. The voltage that was revised were the "maximum input voltage of inverter, $V_{inv\_\max\_rev}$, maximum input voltage limit into MPPT of inverter, $V_{MPPT\_\max\_rev}$, and the minimum revised input voltage limit to the MPPT inverter, $V_{MPPT\_\min\_rev}$". These values were calculated based on Eqs. (1, 2 and 3):

$$V_{inv,\max\_rev} = (1 - \lambda_{upper}) \times V_{\max\_inv,} \tag{1}$$

$$V_{MPPT,\max\_rev} = \left(1 - \lambda_{upper}\right) \times V_{\mathrm{MPP}\_max}, \tag{2}$$

$$V_{MPPT,\min\_rev} = (1 + \lambda_{lower}) \times V_{\mathrm{MPP}\_min}. \tag{3}$$

A safety margin was applied to the input voltage of the inverter, represented by λ_{upper} and λ_{lower} which are 5% and 10%, respectively, as per the lowest and the highest module temperature known in Malaysia.

Step 3: The maximum open-circuit voltage of the PV modules, $V_{OC,max}$, the maximum voltage at maximum power of PV cells, $V_{MP,max}$, the minimum voltage at maximum power, $V_{MP,min}$, and the minimum voltage at maximum power after the voltage drop has been considered, $V_{min.VD}$, are to be computed to identify the utmost voltages of the PV cells. These voltages can be computed based on the equations below:

$$V_{OC,max} = V_{OC} - \left[\mu_{V_{OC}} \times \left(T_{cell,min} - T_{STC}\right)\right], \tag{4}$$

$$V_{MP,max} = V_{MP,STC} - \left[\mu_{V_{MP}} \times \left(T_{cell,min} - T_{STC}\right)\right], \tag{5}$$

$$V_{MP,min} = V_{MP,STC} - \left[\mu_{V_{MP}} \times \left(T_{cell,max} - T_{STC}\right)\right], \tag{6}$$

$$V_{min.VD} = (1 - \rho) \times V_{MP,min.} \tag{7}$$

$T_{cell,min}$ and $T_{cell,max}$ are the minimum and maximum cell temperature which were set to be 20 °C and 60 °C based on the simulation data, respectively. Based on the Malaysian Standard MS1837 the maximum allowable voltage drop across the direct current cables was set to 5% as per the standards.

Step 4: To accommodate the inverter voltage and the current limit the minimum and maximum number of PV cells in a single string and the maximum number of parallel strings can be calculated based on Eqs. 8, 9, 10 and 11:

$$N_{s,\max\_OC} = \frac{V_{inv,\max\_rev}}{V_{OC,max}}, \tag{8}$$

$$N_{s,\max\_MP} = \frac{V_{MPPT,\max\_rev}}{V_{MP,max}}, \tag{9}$$

$$N_{s,min} = \frac{V_{MPPT,\min\_rev}}{V_{min,VD}}, \tag{10}$$

$$N_{P,max} = \frac{I_{DC,\max\_inv}}{(1 + \omega) \times I_{SC}}. \tag{11}$$

With reference to the open-circuit voltage and the maximum power of PV cells, $N_{s,\max\_OC}$ and $N_{s,\max\_MP,}$ the maximum number of PV cells that can be fit into a string can be obtained. Based on the computation, the lowest value from $N_{s,\max\_OC}$ and $N_{s,\max\_MP}$ was chosen as the maximum allowable number of PV cells that can be fit into a string, $N_{s,\max}$. To ensure the output voltage of the PV cells do not drop below the $V_{MPPT,\min\_rev}$ the minimum permissible number of PV cells, $N_{s,min}$ fit in a string was rounded up to the nearest integer. In order to ensure the array current does not surpass the $I_{DC,\max\_inv}$ the maximum allowable of PV cells arranged in parallel,$N_{P,max}$ was rounded down to the nearest integer. Based on Sulaiman et al., (2012) the safety margin,ω, was set to be 25% after the consideration that there will be a variation in the irradiance (> 1000 Wm^{-2}).

Step 5: The possible array configurations are decided with reference to $N_{s,\max}$, $N_{s,min}$ and$N_{P,max}$. The configurations are seen in terms of the possible number of strings arranged in series and parallel, $N_{s,possible}$ and $N_{P,possible}$. Based on each array configuration the PV array's voltage of the system $V_{,system}$ can be computed as per Eq. 12:

$$V_{,system} = N_{s,possible} \times V_{MP,STC.} \tag{12}$$

The $V_{,system}$ needs to be within the permissible voltage of the system, $V_{,system\_max}$.

Step 6: For each PV configuration, the actual rated power, P_{array,STC_actual}, was computed with Eq. 13:

$$P_{array,STC\_actual} = N_{s,possible} \times N_{P,possible} \times P_{MP,STC}. \tag{13}$$

Step 7: Inverter–PV ratio, SR_{inv-PV}, was deduced based on Eq. 14:

$$SR_{inv-PV} = \frac{P_{inv}}{P_{array,STC\_actual}}. \tag{14}$$

Step 8: The PV configurations that exceeded the inverter–PV ratio from 0.75 to 1.0 (Khatib et al., 2012) according to Malaysia's optimal sizing range was eliminated.

Step 9: The shading analysis was carried out to identify the crucial parameters, like the orientation, tilt angle and the spacing between the panels. The surroundings around the PV configuration were considered, like trees that may cause hindrance to the solar radiation to reach the PV cells. Equations 15 through 19 describe the minimum distance needed between each solar panel:

$$\sin\alpha = \sin\phi\sin\delta + \cos\phi\cos\delta\cos\omega, \tag{15}$$

$$\cos\psi = \frac{\cos\delta\sin\omega}{\cos\alpha}, \tag{16}$$

$$L_{SH} = \frac{h\cos\psi}{\tan[\arcsin(0.648\cos\phi - 0.339\sin\phi)]}, \tag{17}$$

$$D_r = L_{SH}\sin\theta, \tag{18}$$

$$h = L\sin\theta, \tag{19}$$

where α is the sun elevation angle, ϕ is the latitude angle of the solar PV site, ψ is the azimuth of the sun, δ is the solar declination angle, ω is the hour angle, θ is the tilt angle, L_{SH} is the shadow length, h is the height of the solar panels, L is the length of the solar cells and D_r is the distance between two rows.

Step 10: The technical performance of the system was identified; the system's yearly performance was computed and the Performance Ratio (PR) was analysed to understand the reliability of the system to inject power to the Grid. The PV modules manufacturers that are approved by the Malaysian Sustainable Energy Development Authority (SEDA) are listed in Table 4. These PV modules were used to make a comparison on the suitable type of PV modules to be used in each of the systems.

Economic analysis

Levelized Cost of Electricity (LCOE) is normally computed based on the capital cost and the operation cost of a Renewable Energy (RE) system and the electricity generation in its lifetime. LCOE is defined as the "ratio of the present value of all discounted costs incurred during the project life to the total electricity generation capacity (kWh) of the project". LCOE acts as a tool to reasonably estimate the cost of electricity generation and can be used to compare the technologies that can reduce the cost of generation. LCOE is computed based on Eq. 20:

$$LCOE = \frac{\sum_{t=1}^{n} \frac{I_t + M_t}{(1+r)^t}}{\sum_{t=1}^{n} \frac{E_t}{(1+r)^t}}. \tag{20}$$

From Eq. 20 we understand that LCOE is the sum of the investment and expenditures of the year, I_t, with the operational and maintenance expenditure of the year, M_t, divided by the electricity production of the year, E_t. The discount rate that can be earned with an alternative investment is represented by r and n represents the lifetime of the project and in these cases 20 years.

Part 1: preliminary scoping

Based on the methodology in 4.2, a scoping energy tool was utilized to understand the PV system. The energy tool was able to project the expected optimization needs for the system. Two locations with low capacities we chosen to understand the governing factors in sizing a PV system: Kuala Langat, Selangor (9.98 MW) and Kluang, Johor (9.99 MW). Table 5 shows the design assumptions of the PV plants.

Table 4 PV module specifications

Model No.	Module type	Rated power	Cell efficiency (%)
Q-PLUS BFR-G4 .1275	Polycrystalline	275	16.47
FS-6450 Jun 2019	Thin film	450	19.94
JKM410M-72H-V	Monocrystalline	410	20.50
Q.PEAK L-G4.1 345 Maxim	Monocrystalline	345	17.31

Table 5 Design specifications for preliminary scoping

Specifications of Kuala Langat, Selangor		Specifications of Kluang, Johor	
System Components and Matrices	***Data***	***System Components and Matrices***	***Data***
Modules	Malaysian Solar, MYS-72P/B3/CF-300 (300W)	Modules	Malaysian Solar, MYS-72P/B3/CF-300 (300W)
Inverters	Solaron 250 kW	Inverters	Solaron 250 kW
String wiring	10 AWG (Copper)	String wiring	10 AWG (Copper)
Performance ratio	79%	Performance ratio	79.4%
Irradiance	kWh/m^2	Irradiance	kWh/m^2
Energy	kWh	Energy	kWh
Racking	Fixed Tilt	Racking	Fixed Tilt
Module azimuth	180°	Module azimuth	180°
Cells per string	19–21	Cells per string	19–21
Cells spacing	0.05 ft	Cells spacing	0.05 ft
Setback	8 ft	Setback	10 ft
DC/AC ratio	1.24	DC/AC ratio	1.24
Weather dataset	TMY, 10 km Grid, meteonorm	Weather dataset	TMY, 10 km Grid, meteonorm
Solar angle location	Meteo Lat/Lng	Solar angle location	Meteo Lat/Lng
Transposition model	Perez Model	Transposition model	Perez Model
Temperature model	Sandia Model	Temperature model	Sandia Model
Soiling	2%	Soiling	2%
Irradiance variance	5%	Irradiance variance	5%
Cell temperature spread	4 °C	Cell temperature spread	4 °C
Module binning range	−2.5 to 2.5%	Module binning range	−2.5 to 2.5%
AC system derate	0.50%	AC system derate	0.50%

Part 2: advanced system analysis

In this section, further analysis was done to understand the PV system proposed. The PV system was analysed in terms of its shading analysis, placement of PV cells, the configuration of the PV arrays and the suitable inverter–PV ratio. Two locations Machang, Kelantan and Pekan, Pahang were selected with capacities of 30 MW and 100 MW, respectively. The sun path diagrams of Machang and Pekan are shown in Figs. 2 and 3.

The main design parameters are listed in Table 6; these values are crucial in calculating the energy generation profile of the PV system.

Optimizer

There are several optimizer options available in the advanced system analysis stage, the first one being a module-level optimizer. The one used in the energy modelling tool is the AMPT module-level optimizer. This optimizers act as DC-DC boost-buck converters that promises maximum power produced from the PV cells. The pre-defined voltage and current governs the maximum power curve. The maximum power curve is defined as per Eq. 21:

$$I_{out} = \frac{Maximum\ Power\ of\ PV}{U_{out}}. \tag{21}$$

This indicates that the lower the power, the more the parts of the hyperbola in the limits. Through this a range of voltage where optimal power is produced can be promised within the number of strings of AMPT optimizers. The PV specifications (i.e. voltage, current and power) need to be compatible with the AMPT converters. Another optimizer used in this project is the DC-DC converters which are connected to each submodule of a PV cell. The MAXIM integrated optimizers are used with PV cells that have built-in optimizers. These optimizers behave as MPP trackers for each submodule and work in the "Buck only" mode.

Results and discussion

The results obtained from the preliminary scoping and advanced system analysis in order to identify an optimum configuration of the PV systems have been documented in this section. The parameters used in this study to simulate a real-life situation have been kept almost similar to a real-life case scenario.

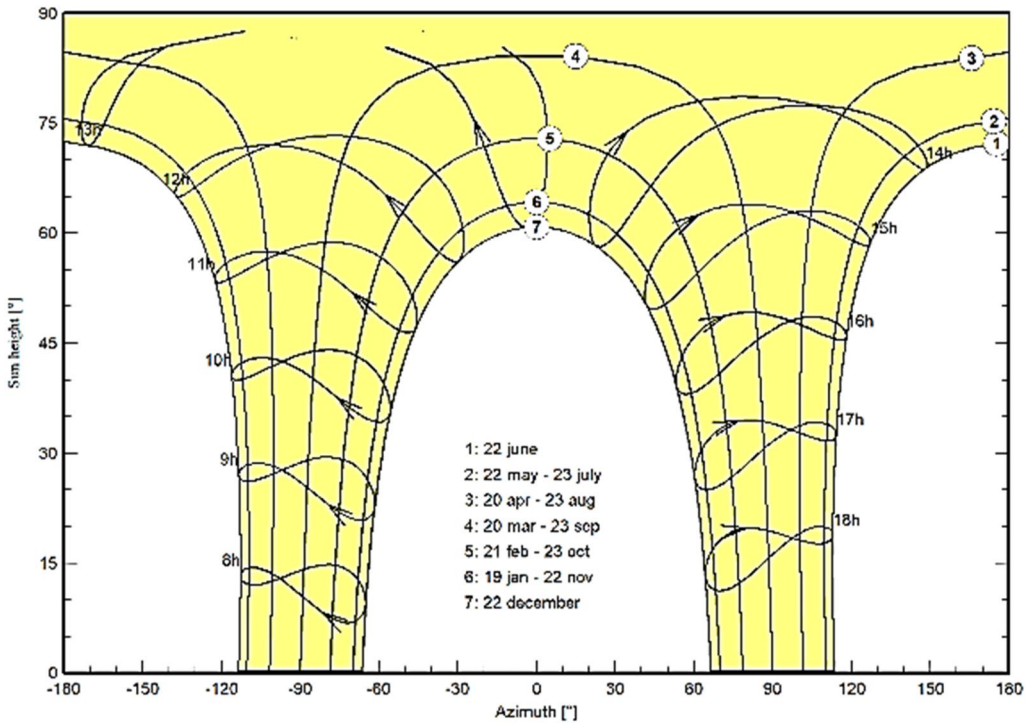

Fig. 2 Sun paths of Machang, Kelantan

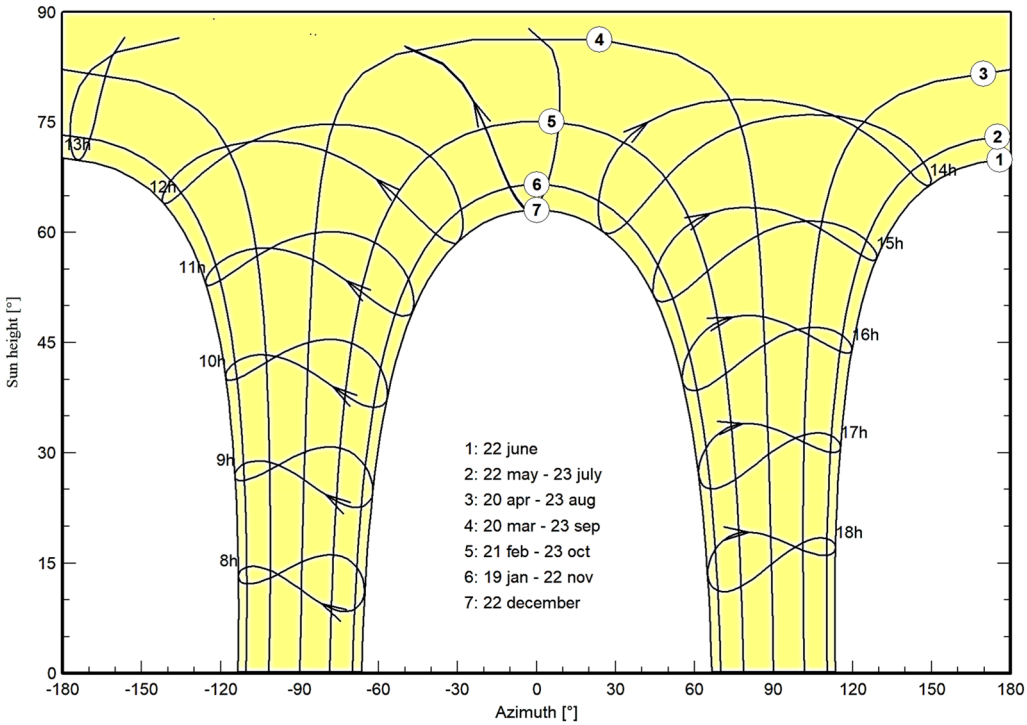

Fig. 3 Sun paths of Pekan, Pahang

Table 6 Input parameters for project design for advanced system analysis

Machang, Kelantan		**Pekan, Pahang**	
System variant		**System variant**	
Parameters	Data	Parameters	Data
Variant n°	VC1	Variant n°	VC1
Orientation		Orientation	
Parameters	Data	Parameters	Data
Field type	Fixed tilt plane	Field type	Fixed tilt plane
Plane tilt	5°	Plane tilt	5°
Azimuth	0°	Azimuth	0°
Optimization	Yearly irradiation yield	Optimization	Yearly irradiation yield
System		System	
Parameter	Data	Parameter	Data
Planned power	30 000 kWp	Planned power	30 000 kWp
PV module	First Solar	PV module	Hanwa Q Cells
Inverter type	ABB	Inverter type	Growatt New Energy
Detailed losses		Detailed losses	
Parameter	Data	Parameter	Data
Thermal parameters	"Free" mounted modules with air circulation	Thermal parameters	"Free" mounted modules with air circulation
Ohmic losses	STC losses—1.5%	Ohmic losses	STC losses—1.5%
Ageing	Degradation factor as PV cell datasheet	Ageing	Degradation factor as PV cell datasheet
OPTIMIZER	AMPT V430-12	OPTIMIZER	MAXIM (MAX20800A)

Stage 1: preliminary scoping

The simulation was done for two locations, (1) Kuala Langat, Selangor and (2) Kluang, Johor. The simulation was conducted by mapping out the possible array arrangement and calculating the monthly production of the system. Figure 4 shows the Grid power produced throughout 2021 for Kuala Langat, Selangor.

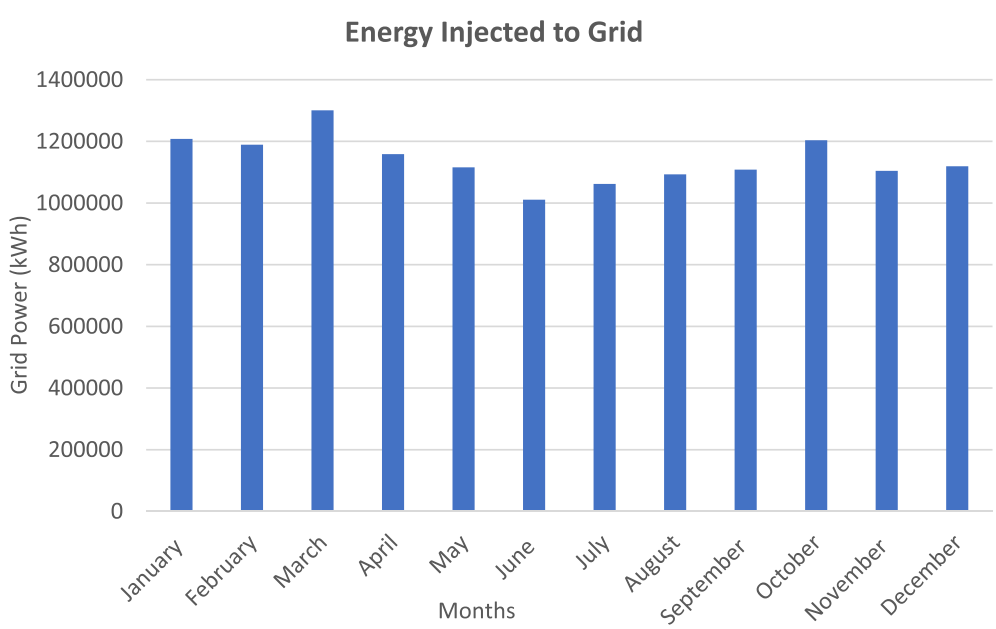

Fig. 4 Energy injected to grid for Kuala Langat

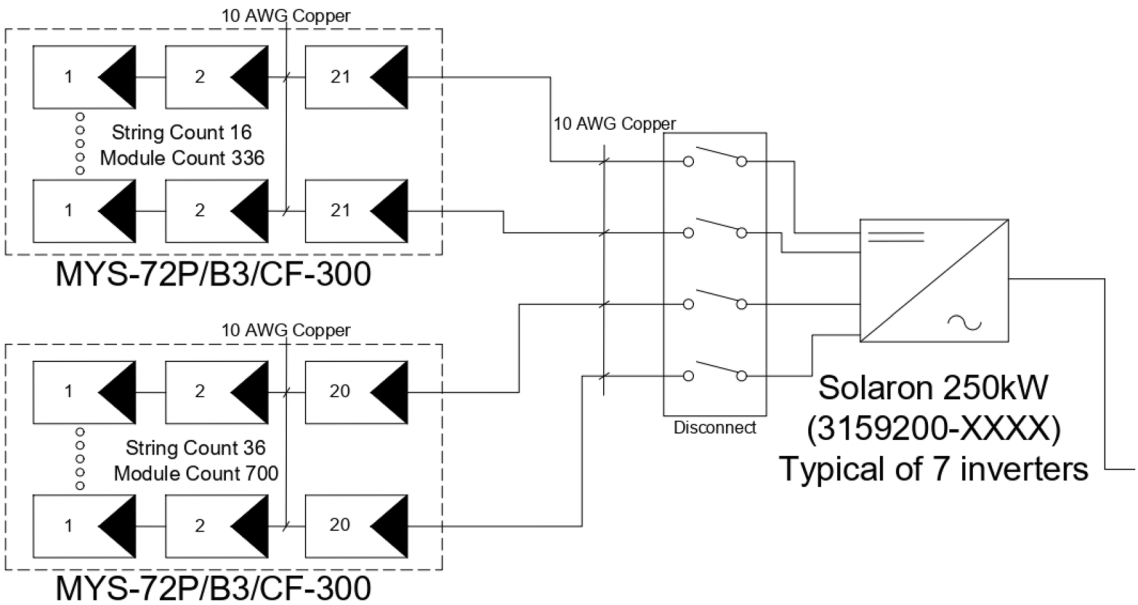

Fig. 5 Simplified single line diagram (PVSyst xxxx) of PV plant proposed in Kuala Langat

The total energy injected to the grid is 13,674,600 kWh. As observed in Fig. 4, the highest production of energy is in March and followed by October. The PV cells used are the MYS-72P/B3/CF-300, which has a 300 W Nominal Power and is made of Polycrystalline. The system has a performance ratio of 79%. Figure 5 shows the single line diagram (SLD) of the PV system that was simulated, and based on the diagram we can observe that there are four clusters of PV cells that each has string counts from the range of 16 to 35. Each cluster is connected to a disconnector with 10 AWG copper wires which is connected to the inverters of the PV system, and there are a total of 35 inverters in the system. The inverters are connected to a 35-circuit interconnect and then to the AC disconnect

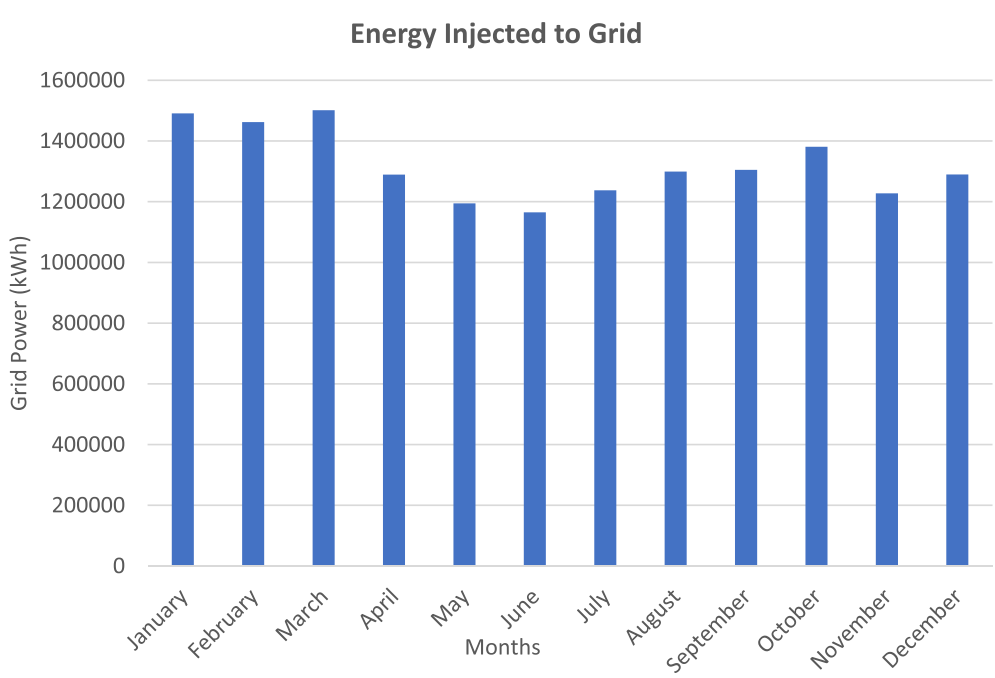

Fig. 6 Energy injected to grid for Kluang

which is connected to the service panel. The service panel is connected to the metre which is then connected to the grid.

Figure 6 shows the Grid power produced throughout 2021 for Kluang, Johor. The total energy injected to the grid is 15,842,300 kWh. As observed in Fig. 6, the highest production of energy is in March and followed by October. The PV cells used are the MYS-72P/B3/CF-300, which have a 300 W Nominal Power and are made of Polycrystalline. The system has a performance ratio of 79.4%

Figure 7 shows the single line diagram (SLD) of the PV system that was simulated for Kluang, Johor, and based on the diagram we can observe that there are four clusters of PV cells that each has string counts from the range of 17–33. Each cluster is connected to a disconnector with 10 AWG copper wires which is connected to the inverters of the PV system, and there are a total of 41 inverters in the system. The inverters are connected to a 41-circuit interconnect and then to the AC disconnect which is connected to the service panel. The service panel is connected to the metre which is then connected to the grid.

From stage one the governing parameters and the influence of PV cells selection and the inverter selection were identified and further improved in stage two. Table 7 shows the summary of the results from stage one.

Stage 2: advanced system analysis

In this stage, higher capacities of solar PV plants were simulated, and the locations that were studied are Machang, Kelantan and Pekan, Pahang both with capacities of 30 MW. In this stage an optimizer option was introduced into the system configuration to further improve the annual power production.

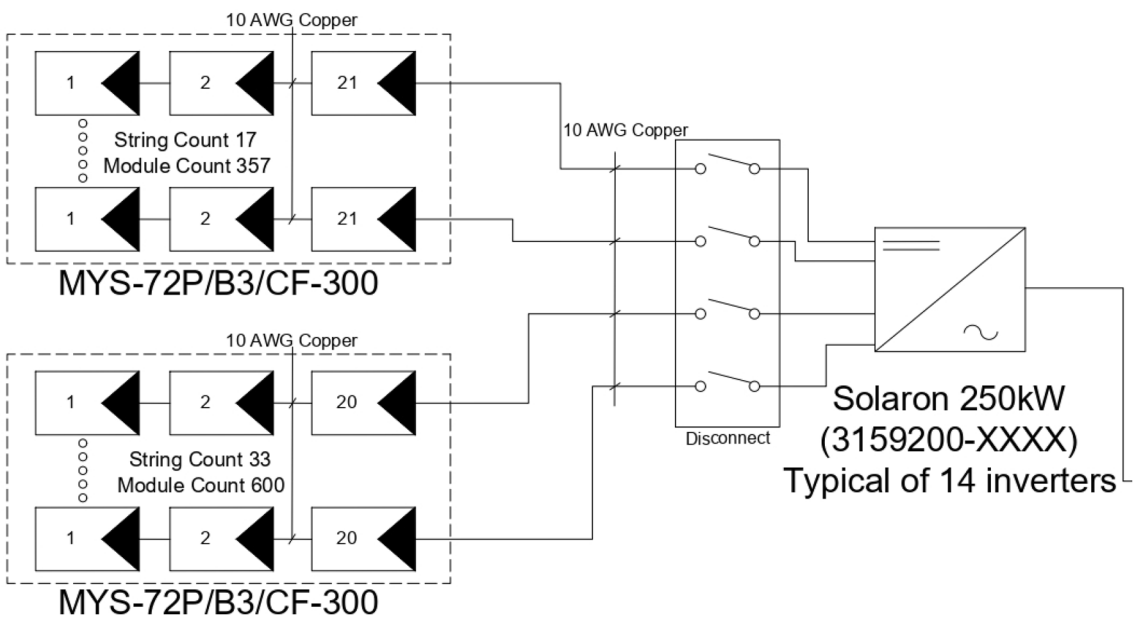

Fig. 7 Simplified single line diagram (PVSyst xxxx) of PV plant proposed in Kluang

Table 7 Summary of Preliminary Scoping

Kuala Langat, Selangor		Kluang, Johor	
System metrices	**Results**	**System metrices**	**Results**
Annual energy production	13,674,600 kWh	Annual energy production	15,842,300 kWh
Performance ratio	79.0%	Performance ratio	79.4%
kWh/kWp	1256.1	kWh/kWp	1265.6
Number of modules	36288	Number of modules	41724
Number of inverters	35	Number of inverters	41
Number of strings	1785	Number of strings	2050

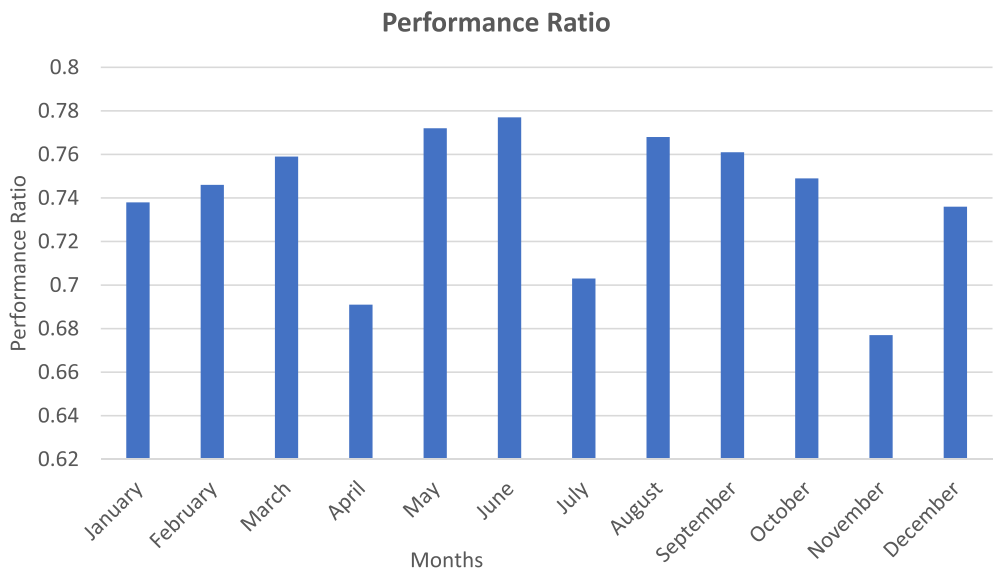

Fig. 8 Performance ratio of Machang

a) Machang, Kelantan

The performance ratio of the PV system before the optimizer was introduced; the average performance ratio of the system is 71.3%. Figure 8 shows the performance ratio of the optimized system in Machang, Kelantan, and the average performance ratio is 74.1%, and with 66,667 PV modules connected to 16 inverters the PV system has an annual generation of 38,710 MWh/year. The inverter was switched to one that was suitable for the AMPT optimizer.

Figure 9 shows the energy that is annually injected to the grid, the highest is observed to be in March and the

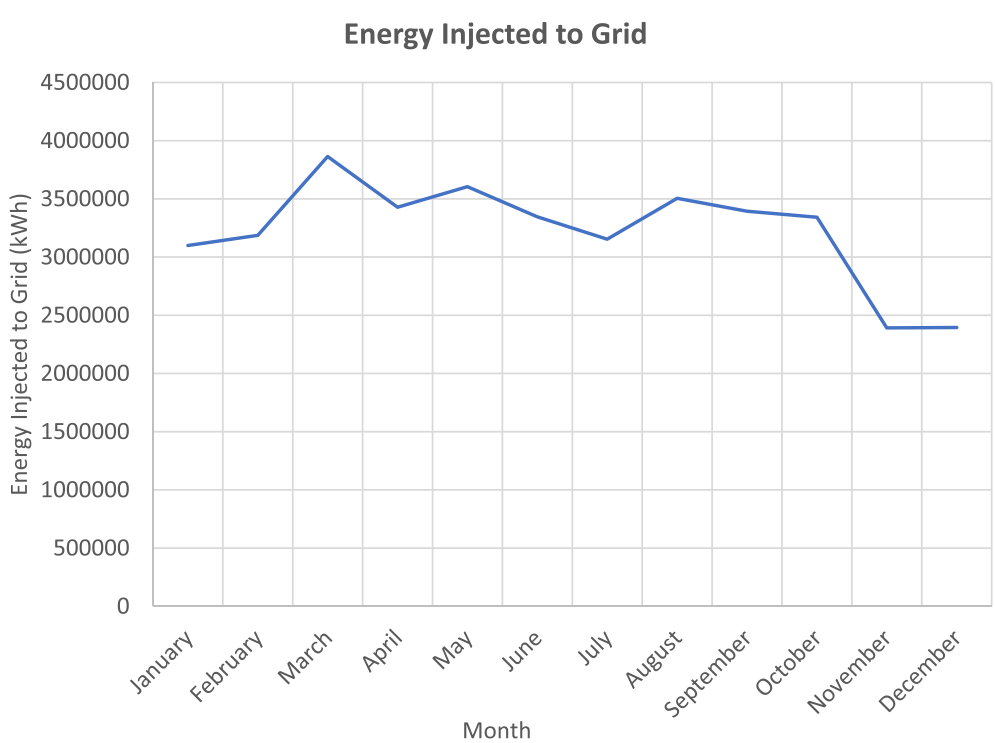

Fig. 9 Energy injected to grid for Machang plant

lowest in December. This is due to the irradiance during this time of the year. A higher irradiance generates a better yield. As observed the generation is much lower towards the end of year as the irradiance reduces due to the wet season.

The system was simulated before introducing an optimizer. The pre-optimized system had a lower system production. Once the system was optimized there was an increase of 3.9% in the system production. The implementation of an AMPT optimizer maximized the output power of the PV modules, therefore further improving the PV plant. Table 8 shows the improvement to the LSS-PV when the optimizer was introduced to the system.

Table 8 Pre-optimized system vs post-optimized system (Machang)

	Pre-optimization	Post-optimization
PV model	FS-6450 Jun2019	FS-6450 Jun2019
inverter model	ULTRA 1500-TL-OUTD-1-US-690-M/S-DNVKEMA	ULTRA 1500-TL-OUTD-1-US-690-M/S-DNVKEMA
Optimizer	None	AMPT V600-12 (6875W)
system production	37,253 MWh/year	38,721 MWh/year
Performance ratio	0.713	0.741
System losses	0.17%	0.17%

b) Pekan, Pahang

The performance ratio of the PV system before the optimizer was introduced; the average performance ratio of the system is 79.1%. Figure 10 shows the performance ratio of the optimized system in Machang, Kelantan, and the average performance ratio is 80.1%. With 86,957 PV modules connected to 24 inverters the PV system has an annual generation of 41,262 MWh/year. The inverter was switched to one that was suitable for the MAXIM optimizer. Figure 11 shows the energy that is annually injected to the grid, the highest is observed to be in March and the lowest in December.

The optimizer has further improved the annual generation by 1.17%, from 40,785 MWh/year to 41,262 MWh/year. The MAXIM optimizer optimized the system by improving the PV modules at the sub-module stage. Table 9 shows the comparison between the pre-optimized and post-optimized plant that has been proposed in Pekan.

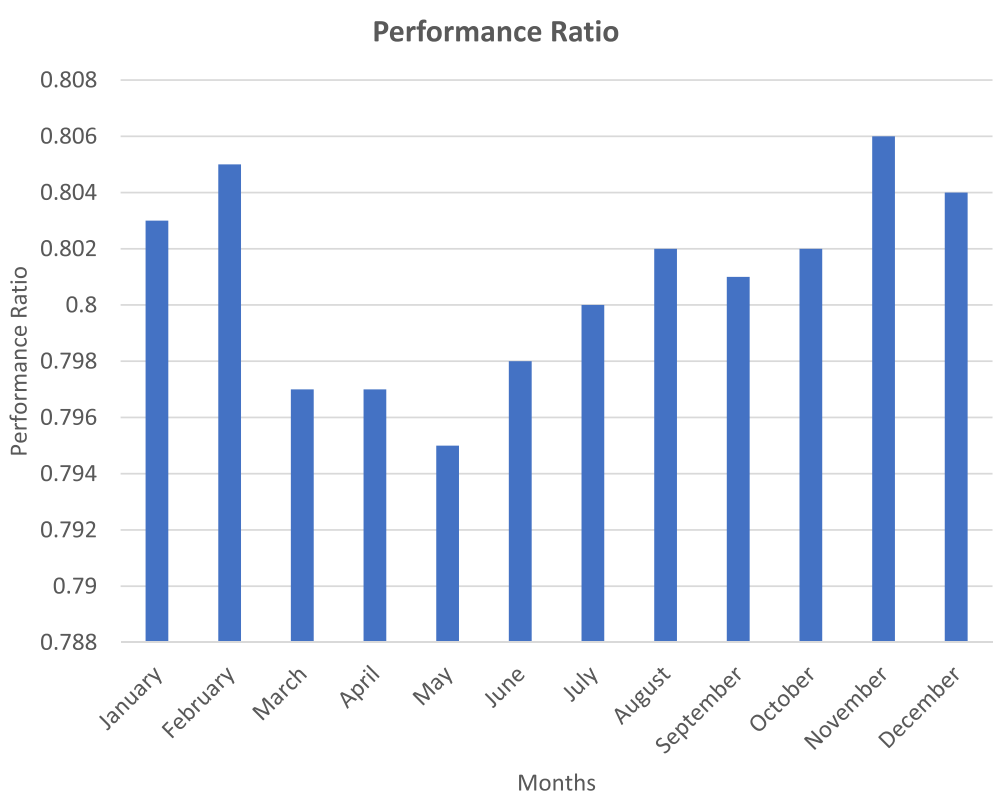

Fig. 10 Performance ratio of Pekan plant

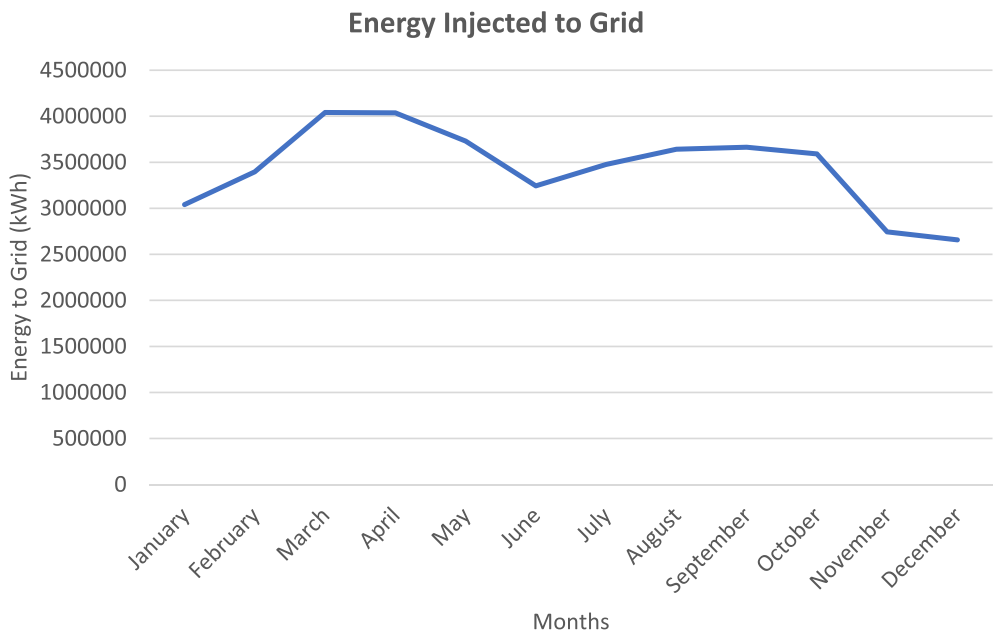

Fig. 11 Energy injected to the grid from Pekan plant

Table 9 Pre-optimized system vs post-optimized system (Pekan)

	Pre-optimization	Post-optimization
PV model	Q-Peak-Duo-G8-345	Q.PEAK L-G4.1 345 Maxim
Inverter model	Growatt CP1260 Station	Growatt CP1000 Station
Optimizer	None	MAX 20800A (384 W)
System production	40,785 MWh/year	41,262 MWh/year
Performance ratio	0.791	0.801
System losses	0.06%	0.06%

Analysis of the systems

The preliminary scoping was done to scope out the necessary parameters that need to be considered when designing a PV system. Based on the scoping outcome, design parameters that need to be optimized are the PV modules, the inverter and to include an optimizer. The shading analysis was done in a detailed manner in the advanced system analysis. The shading factor was calculated linearly for Machang, Kelantan and Pekan, Pahang. The shading factor for diffused was computed to be 0.064 and the albedo shading factor is 0.587 in Machang. In Pekan, the diffused and albedo shading factor was 0.01 and 0.171, respectively. A lower shading factor indicates better production of power. Table 10 shows the comparison of the final yields of each of the systems. The preliminary stages prove that the plants can be further optimized and the energy that can be injected to the grid can be improved drastically. Implementing optimizers in the advanced analysis stage has proven to be fruitful as the energy injected to the grid has improved as shown in Table 10.

Economic analysis

The economic evaluation of this project was done based on the Levelized Cost of Electricity (LCOE). After the systems were optimized, the economic analysis for the

Table 10 Overall View of all Proposed Systems

Sites	Preliminary scoping		Advanced system analysis	
	Kuala Langat, Selangor	Kluang, Johor	Machang, Kelantan	Pekan, Pahang
Capacity	9.98 MW	9.99 MW	30 MW	30 MW
Number of PV cells	36,288	41,724	66,667	86,957
Number of inverters	35	41	16	24
Energy injected to grid annually	1,364,700 kWh	15,842,300 kWh	38,709,728 kWh	41,261,527 kWh
Performance ratio	0.79	0.794	0.741	0.801

30 MW plants was carried out. The Feed-in-Tariff for a 30 MW plant is 0.85 MYR/kWh according to Rates (2020). Machang, Kelantan has a payback period of 7.7 years with a LCOE of 0.484 MYR/kWh. The LCOE is an indicator that the plant is worth investing and is profitable to the investor. The payback period for the Pekan project is 3.9 years with an LCOE of 0.535 MYR/kWh.

Environmental analysis

The construction of any power plant has its impact on the environment. The construction of an LSS-PV can be beneficial to the environment and therefore should be encouraged. The proposed LSS-PV in Machang, Kelantan has proved to save 20,451.88 tonnes of carbon dioxide per year. The Pekan, Pahang LSS-PV can save 23,628.894 tonnes of carbon dioxide per year. These figures prove that the implications of LSS-PV on the environment have its pros and are much more sustainable in the long run.

Conclusion

With detailed analysis of the design considerations of solar PV plant, optimizers are beneficial in ensuring that the generation of the system can be increased, therefore ensuring the solar PV plant is able to achieve the desired generation. Due to the intermittent nature of solar energy, the usage of optimizers proves to be a viable option to ensure this clean source of energy is used more prevailing. From an economic perspective solar energy has become more affordable and in fact a lucrative source of income to the country as more stakeholders' venture into new technologies to ensure the advancement of this field. The preliminary stage has proven effective to understand the design parameters that can be optimized to provide an increase in the system production. The small plants which were proposed to be built in Kuala Langat, Selangor and Kluang, Johor produce energy of 1,364,700 kWh and 15,842,300 kWh, respectively.

The advanced analysis stage studies the design parameters in depth incorporating an optimizer at the module level. The plant proposed in Machang, Kelantan has an improvement of 3.9% in the system production and the one in Pekan, Pahang has an improvement of 1.7%. The AMPT and MAXIM optimizer improved the output power at the PV modules level and therefore affected the system as a whole. These optimizers are DC-DC converters that promise maximum power from the module regardless of the voltage or current imposed at the output of the device. The advanced analysis was further studied in terms of the economic viability and the environmental benefits. The plants proposed in Machang, Kelantan and Pekan, Pahang have an LCOE of 0.484 MYR/kWh and 0.535 MYR/kWh, respectively. LCE method was used to calculate the carbon balance. The amount of carbon dioxide that was saved for Machang, Kelantan and Pekan, Pahang was 0.682 tCO_2/kWp/year and 0.788 tCO_2/kWp/year, respectively.

For the future, there are several design and overall system parameters that can be considered to further improve the performance of a utility-scale solar PV plant. Future projects can investigate the influence of optimizing the system losses as a whole on the energy production of the system. The Sustainable Energy Development Authorities will have great benefit from the outcome of this project as it will be done in the context of Malaysia's Renewable Energy development. The national utility provider can use this work as reference regarding potential solar-related developments that will be rapidly developed soon as the Malaysian government seeks to switch to greener energy. The neighbouring Southeast Asian countries with similar climate can refer to this project when venturing into potential greener energy options.

Acknowledgements
Not applicable.

Author contributions
HLT was involved in data analysis, interpretation of data and manuscript writing, and YIG was involved in supervision, design of the work and manuscript revision.

Funding
Not applicable.

Availability of data and materials
The datasets generated during and/or analysed during the current study are available from the corresponding author on reasonable request.

Declarations

Competing interests
The authors declare that they have no competing interest.

Received: 28 March 2023 Accepted: 18 July 2023
Published online: 18 August 2023

References

Alsadi, S., & Khatib, T. (2018). Photovoltaic power systems optimization research status: A review of criteria, constrains, models, techniques, and software tools. *Applied Sciences, 8*(10), 1761.

Aziz, P. A., Wahid, S. S. A., Arief, Y. Z., & Aziz, N. A. (2016). Evaluation of solar energy potential in Malaysia. *Trends in Bioinformatics, 9*(2), 35–43.

Cabrera-Tobar, A., Bullich-Massagué, E., Aragüés-Peñalba, M., & Gomis-Bellmunt, O. (2016). Review of advanced grid requirements for the integration of large scale photovoltaic power plants in the transmission system. *Renewable and Sustainable Energy Reviews, 62*, 971–987.

Christopher Lee, C. J., & Ramlel, A. (2019). *Here comes the sun: development of solar energy industry in Malaysia* (p. 3). LAWYERS WHO KNOW ASIA, Rajah and Tann Asia.

Dorothal, M. *Top 25 solar plants in Southeast Asia*. Unlocking solar capital: Asia & Financial Summit 24-May-2018. 7-April-2020. https://asia.unlockingsolarcapital.com/news/2018/5/23/top-25-solar-plants-in-southeast-asia. Accessed on August 2021.

Edmund, J. W. T., & Go, Y. I. (2022). Enhancement and validation of building integrated PV system: 3D modelling, techno-economics and

environmental assessment. *Energy and Built Environment, 3*(4), 444–466. https://doi.org/10.1016/j.enbenv.2021.05.001

Energy consumption in Malaysia. (2020). WorldData.info. https://www.worldata.info/asia/malaysia/energy-consumption.php. Accessed on August 2021.

Hamzah, A. H., & Go, Y. I. (2023). Design and assessment of building integrated PV (BIPV) system towards net zero energy building for tropical climate. *E-Prime - Advances in Electrical Engineering, Electronics and Energy, 3*, 100105. https://doi.org/10.1016/j.prime.2022.100105

Installation of grid-connected photovoltaic (PV) system) (first revision), D.O.S. MALAYSIA, Editor. (2010). Department of Standards Malaysia: Ministry of Science, Technology and Innovation Level 1 & 2, Block 2300, Century Square 1, Jalan Usahawan 63000 Cyberjaya Selangor Darul Ehsan ,Malaysia.

IEC Standard for Photovoltaic (PV) arrays. International Electrotechnical Commission. https://webstore.iec.ch/publication/25949. Accessed on August 2020.

IEEFA. (2019, November 20). Solar power in Southeast Asia booming as costs drop below gas-generation. Retrieved June 3, 2020, from https://ieefa.org/solar-power-in-southeast-asian-booming-as-costs-drop-below-gas-generation/#:~:text=Regionally%2C%20Southeast%20Asia's%20cumulative%20solar,according%20to%20consultancy%20Wood%20Mackenzie.&text=Solar%20energy%20investment%20and%20deployment,across%20and%20within%20ASEAN%20members.

Kerekes, T., et al. (2011). *A practical optimization method for designing large PV plants. In 2011 IEEE International Symposium on Industrial Electronics*. IEEE.

Kerekes, T., Koutroulis, E., Séra, D., Teodorescu, R., & Katsanevakis, M. (2012). An optimization method for designing large PV plants. *IEEE Journal of Photovoltaics, 3*(2), 814–822.

Khatib, T., Mohamed, A., Sopian, K., & Mahmoud, M. (2012). An iterative method for calculating the optimum size of inverter in PV systems for Malaysia. *Electrical Review, 88*(4a), 281–284.

Khatib, T., Mohamed, A., Mahmoud, M., & Sopian, K. (2015). Optimization of the tilt angle of solar panels for Malaysia. *Energy Sources, Part a: Recovery, Utilization, and Environmental Effects, 37*(6), 606–613.

Khatib, A. Yasin, A. A. M. & Ibrahim, I. A. (2017). On the effectiveness of optimally sizing an inverter in a grid-connected photovoltaic power system.2017 *14th International Conference on Smart Cities: Improving Quality of Life Using ICT & IoT (HONET-ICT)*, Irbid/Amman, Jordan, pp. 48–52, doi: https://doi.org/10.1109/HONET.2017.8102220.

Kornelakis, A., & Koutroulis, E. (2009). Methodology for the design optimisation and the economic analysis of grid-connected photovoltaic systems. *IET Renewable Power Generation, 3*(4), 476–492.

Kornelakis, A., & Marinakis, Y. (2010). Contribution for optimal sizing of grid-connected PV-systems using PSO. *Renewable Energy, 35*(6), 1333–1341.

Liu, G., Rasul, M. G., Amanullah, M. T., & Khan, M. M. (2012). Techno-economic simulation and optimization of residential grid-connected PV system for the Queensland climate. *Renewable Energy, 45*, 146–155.

Luo, L., Gu, W., Zhang, X.-P., Cao, G., Wang, W., Zhu, G., You, D., & Wu, Z. (2018). Optimal siting and sizing of distributed generation in distribution systems with PV solar farm utilized as STATCOM (PV-STATCOM). *Applied Energy, 210*, 1092–1100.

Malaysia Electricity Consumption. (2020). CEIC. Retrieved April 15, 2020, from https://www.ceicdata.com/en/malaysia/electricity-generation-and-consumption/electricity-consumption

Mondol, J. D., Yohanis, Y. G., & Norton, B. (2009). Optimising the economic viability of grid-connected photovoltaic systems. *Applied Energy, 86*(7–8), 985–999.

Notton, G., Lazarov, V., & Stoyanov, L. (2010). Optimal sizing of a grid-connected PV system for various PV module technologies and inclinations, inverter efficiency characteristics and locations. *Renewable Energy, 35*(2), 541–554.

Petinrin, J. O. (2015). Renewable energy for continuous energy sustainability in Malaysia. *Renewable and Sustainable Energy Reviews, 50*, 967–981.

PVSyst, "PVSyst 7 Help," SA. https://www.pvsyst.com/help/index.html?for-.

Rakhshani, E., Rouzbehi, K., Sánchez, J. A., Tobar, A. C., & Pouresmaeil, E. (2019). Integration of Large Scale PV-Based Generation into Power Systems: A Survey. *Energies, 12*(8), 1425.

Ramli, M. A., Hiendro, A., Sedraoui, K., & Twaha, S. (2015). Optimal sizing of grid-connected photovoltaic energy system in Saudi Arabia. *Renewable Energy, 75*, 489–495.

FiT Rates, 2020. Malaysia Solar PV Feed-in Tariff (FiT) Rates [Online]. https://www.solarsystemmalaysia.com/fit/fit-rates/. Accessed on August 2021.

Rosselan, M., Sulaiman, S., & Othman, N. (2017). *Sizing optimization of large-scale grid-connected photovoltaic system using dolphin echolocation algorithm. In Proceedings of the 9th International Conference on Computer and Automation Engineering*.

Shaping the Future of Malaysia's Energy Sector, E.C. 2018. https://www.st.gov.my/contents/files/download/112/Energy_Malaysia_18_(Online).pdf. Accessed on August 2020.

Sulaiman, S. I., Rahman, T. K., Musirin, I., Shaari, S., & Sopian, K. (2012). An intelligent method for sizing optimization in grid-connected photovoltaic system. *Solar Energy, 86*(7), 2067–2082.

Thadani, H. L., & Go, Y. I. (2021). Integration of solar energy into low-cost housing for sustainable development: case study in developing countries. *Heliyon, 7*(12), e08513. https://doi.org/10.1016/j.heliyon.2021.e08513

Türkay, B. E., & Telli, A. Y. (2011). Economic analysis of standalone and grid connected hybrid energy systems. *Renewable Energy, 36*(7), 1931–1943.

Wong, J., Lim, Y. S., Tang, J. H., & Morris, E. (2014). Grid-connected photovoltaic system in Malaysia: A review on voltage issues. *Renewable and Sustainable Energy Reviews, 29*, 535–545.

Zebarjadi, M., & Askarzadeh, A. (2016). Optimization of a reliable grid-connected PV-based power plant with/without energy storage system by a heuristic approach. *Solar Energy, 125*, 12–21.

Publisher's Note